# TECHNICAL SPECIFICATION

| | |
|---|---|
| Type | EC Axial Fan |
| Model | BL-A300C-EC-02 |

## STANDARD SPECIFICATIONS

| | | |
|---|---|---|
| Phase | ~ | 1 |
| Rated voltage | VAC | 230 |
| Frequency | Hz | 50/60 |
| Speed | RPM | 1700 |
| Maximum input power | W | 115 |
| Maximum input current | A | 0.85 |
| Sound pressure level | dBA | 60 |
| Certifications | ~ | CCC, RoHS |
| Minimum ambient temperature | °C | -25 |
| Maximum ambient temperature | °C | 60 |

## TECHNICAL SPECIFICATIONS

| | |
|---|---|
| Dimensions (diameter x depth) | 300 x 80.4 mm |
| Impeller material | Plastic |
| Direction of rotation | Counterclockwise (viewed from rotor side) |
| Rotor surface treatment | Powder coating |
| Degree of protection | IP55 |
| Insulation class | B |
| Duty type | S1 |
| Bearing type | Ball bearing |
| Motor protection | Locked-rotor, thermal, over-/undervoltage |
| Cable length | 500 mm |
| RoHS | All components comply with RoHS requirements |
| Operating humidity | 5%-90% RH |
| Motor type | EC external-rotor motor |
| Impeller axial runout | <= 0.5 mm |
| Impeller radial runout | <= 0.5 mm |

## PERFORMANCE CURVE

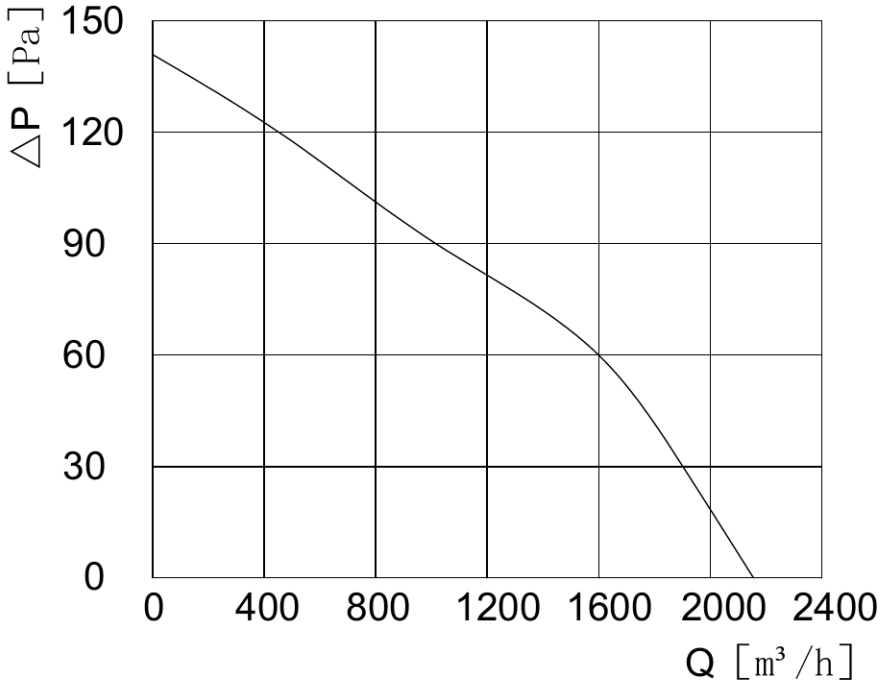


## DIMENSIONAL DRAWING

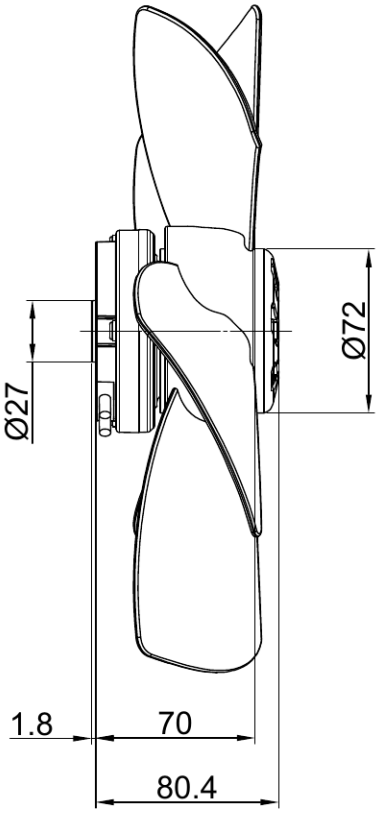


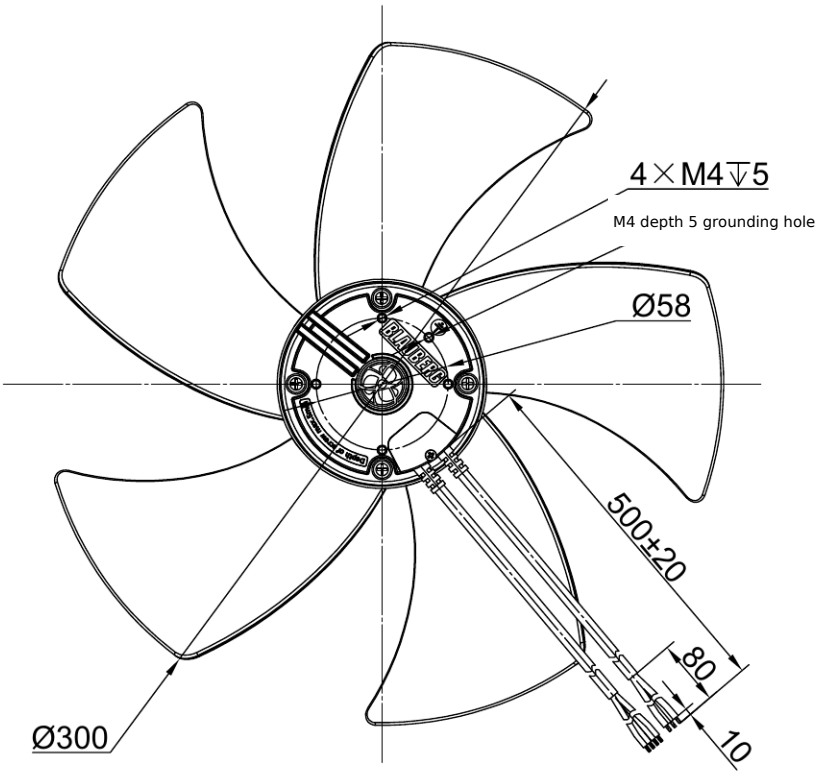

## WIRING DIAGRAM

| Lead | Terminal | Connection | Color | Function |
|---|---|---|---|---|
| Power cable | PE | | Yellow/green | Protective earth |
| | U1 | L | Brown | Live conductor |
| | U2 | N | Blue | Neutral conductor |
| Control cable | U4 | +10V | Red | +10 VDC output |
| | U5 | Speed control | Yellow | 0-10 V / PWM input<br>(PWM max. amplitude: 10 V) |
| | U6 | Feedback | White | Speed signal output |
| | U7 | GND | Blue | Control signal ground |

**POWER CABLE**

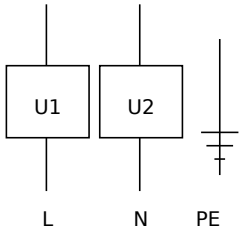


**CONTROL CABLE**

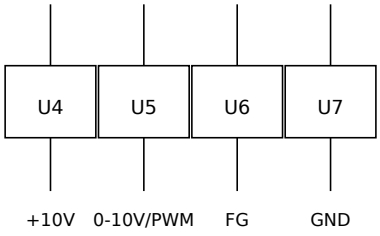


The fan provides a speed output signal. Vfg and the pull-up resistor are supplied by the customer: Vfg = 3-30 VDC; R >= 1000 x Vfg ohms.

Tacho signal output

Open-collector output

## SAFETY AND HANDLING INSTRUCTIONS

1. Connect the power and control leads strictly according to the wiring diagram to prevent damage to the fan.
2. Do not connect the white signal lead directly to the red signal lead or to an external DC power supply.
3. If the fan does not run after power-up, check the speed-control input voltage and all connections. Keep hands and other objects away from the impeller and rotor after power is applied.
4. The fan may require several seconds to start. To prevent injury, do not touch the impeller or rotor while energized or operating at low speed.
5. This fan must not be used by persons lacking the physical, sensory or mental capability, experience or knowledge required for safe operation unless supervised by a responsible person. Keep children away from the product.
6. If the power cable is damaged, it must be replaced by the manufacturer.
7. The motor is an integral part of the fan and must not be operated separately without the impeller or load.
8. After opening the package, repackage the product if further storage is required. Store at -40°C to +80°C and <=95% RH in a clean, ventilated, non-corrosive environment, at least 15 cm above the floor.
9. Read this technical specification carefully before use.